ofgem

energypeople

Appointed examiner's audit of Exceptional Event Claim - Scottish and Southern Energy Power Distribution 33kV bus-bar Incident at Chippenham Grid Substation 14 January 2013

Document Properties

Title: SSEPD – Audit of Exceptional Event Claim – SEPD – Chippenham Grid Substation - 14 January 2013

Reference: ep/Ofgem/SEPD/14 Jan '13

Issue: Final report v2.0

Date: 31 May 2013

Authorisation

Name	Position	Signed	Date
Geoff Stott	energypeople's external auditor		31 May 2013

History

Issue	Date	Originator	Checker	Description
2.0	31 May 2013	Geoff Stott	Mel Brown	Addition of Ofgem's new logo and correction of SCADA definition
1.0	10 May 2013	Geoff Stott	Mel Brown	Final version incorporating comments
0.1	13 April 2013	Geoff Stott	Mel Brown	Draft version circulated to SEPD and Ofgem for factual checking and comment
0.0	11 April 2013	Geoff Stott	Mel Brown	Document created from energypeople template

This document has been prepared for the titled project or named part thereof and should not be relied upon or used for any other project without an independent check being carried out as to its suitability and prior written authority of energypeople. energypeople accepts no responsibility or liability for the consequences of this document being used for a purpose other than the purposes for which it was commissioned. Any person using or relying on the document for such other purpose agrees, and will, by such use or reliance be taken to confirm his agreement, to indemnify energypeople for all loss or damage resulting therefrom. energypeople accepts no responsibility or liability for this document to any party other than the person by whom it was commissioned. Please note that the information or data prepared by parties other than energypeople which has been reviewed in the preparation of this document has not been independently checked or verified for accuracy by energypeople.

Contents

Glossary **4**

Summary **5**

1. Audit part 1 ..... **6**

1.1 Summary of the main facts 6

2. Exceptionality requirements **8**

2.1 Does the event qualify for exclusion 8

2.2 Exceptionality test results 8

3. SEPD's views of its performance **9**

3.1 Dealing with the incident 9

3.2 SEPD's answers to questions on its performance 9

4. Audit part 2 ..... **13**

4.1 SEPD's performance in preventing the event 13

4.2 SEPD's performance in mitigating the effects of the event 14

4.3 Recommended performance adjustments 14

4.4 Detailed justification 14

Appendix A - Record of Audit part 1 ..... **16**

Appendix B - SEPD's photographs **19**

Tables

Table 1 – The number of incidents attributed to the event 8

Table 2 – Summary of exceptionality test results 8

Table 3 – Recommended performance adjustments 14

Figure

Figure 1 – Simplified Network Diagram of SEPD's 33kV distribution network affected by the incident 7

SEPD's Photographs

Photograph 1 – The dead pigeon and porcelain fragments at the foot of the support carrying the reserve 33kV bus-bar 19

Photograph 2 – The damaged 33kV post-type insulators on the reserve bus-bar 20

Photograph 3 – General view of the 33kV compound at the point of damage 21

Glossary

Abbreviation	Meaning
AE	Appointed Examiner
CB	Circuit-breaker
CEGB	Central Electricity Generating Board
CI	Customer Interruptions per 100 connected customers
CML	Customer Minutes Lost per connected customer
DNO	Distribution Network Operator
EHV	Extra High Voltage – all voltages above 20kV up to but excluding 132kV
ep	energypeople
HV	High Voltage – all voltages above 1kV up to and including 20kV
IDMT	Inverse Definite Minimum Time (the operating characteristic of a type of protection relay)
QoS	Quality of Service
RIGs	Regulatory Instructions & Guidance
SCADA	Supervisory Control and Data Acquisition
SEPD	Southern Electric Power Distribution
SSEPD	Scottish and Southern Electricity Power Distribution
SLD	Single Line Diagram
SoF	Statement of Facts
SSE	Scottish and Southern Energy
ToR	Terms of Reference

Notes:

Within this document:

1. The term "higher voltage" is used to indicate all voltages greater than 1kV.
2. The calculations of CI and CML within this document are adapted from the annual calculations contained in the RIGs to reflect the CI and CML generated by the actual incidents being audited.

They are as follows:

CI: the number of interruptions to supply – the number of customers interrupted per 100 connected customers generated by the incidents being audited.

It is calculated as:

$$CI = \frac{\text{the sum of the number of customers interrupted for incidents being audited} * 100}{\text{the total number of connected customers}}$$

CML: the duration of interruptions to supply – the number of customers interrupted per connected customer generated by the incidents being audited.

It is calculated as:

$$CML = \frac{\text{the sum of the customer minutes lost for all restoration stages for incidents being audited}}{\text{the total number of connected customers}}$$

In both the formulae above, the total number of connected customers is as declared as at 30 September during the relevant reporting year. Any claims that occur and are audited prior to 30 September in the reporting year during which they occur will be audited using the total number of customers declared at 30 September in the previous reporting year.

Summary

1. Ofgem has commissioned energypeople as its Appointed Examiner (AE) to audit the submission made by Scottish and Southern Energy Power Distribution (SSEPD) under the "one off" exceptional event mechanism that a bus-bar fault which occurred at its Chippenham Grid Substation at 09:47 on Monday 14 January 2013 adversely affected the reported performance for its Southern Electric Power Distribution (SEPD) licensed area for the reporting year 2012/13.
2. The AE has visited SEPD to audit the claim against part 1 of the "one-off" exceptional event process and finds that it passes the exceptionality threshold in terms of CI but not CML.
3. The AE concludes that the event falls within the category of an "other event" as defined in paragraph 8.57 of Special Licence Condition CRC 8, including meeting the exceptionality requirements set out in Appendix 3 thereof.
4. The AE therefore proceeded to part 2 of the "one-off" exceptional event process, assessing SEPD's performance in mitigating the impact of the event upon its customers.
5. The AE concludes that SEPD is diligently progressing its programme of work regarding protection modifications to install bus-bar protection at its outdoor 33kV Grid Substations to mitigate against incidents of this nature.
6. The AE is satisfied that the work being undertaken at Chippenham Grid Substation at the time of the incident was to install bus-bar protection in accordance with SEPD's programme and that the scheme was commissioned on 31 January 2013.
7. The AE commends SEPD's control engineers for analysing the alarms generated by the incident and for quickly restoring all supplies.
8. The AE also concludes that SEPD replaced the damaged post type insulator and re-commissioned the equipment on the same day as the incident, thus minimising the risk to the security of supplies to its customers.
9. The AE concludes that SEPD had met the criteria of Appendix 4 to paragraph 8.58 of Special Licence Condition CRC 8 and that therefore the incident is deemed to be eligible for adjustment in the DNO's reported performance.
10. The AE therefore recommends that an adjustment to SEPD's 2012/13 reported distribution system performance is made, in line with the part 1 audited CI and CML figures as shown in the following table:

	Audited number	Number above the threshold	Recommended adjustment
CI	1.30	0.40	0.40
CML	0.08	0	0

1. Audit part 1

1.1 Summary of the main facts

11. The AE's headline information log for this event is set out in Table A-1 at Appendix A. In addition, the following paragraphs summarise the main facts of the event.
12. SEPD has provided photographic evidence to support its claim that a pigeon precipitated an incident which affected SEPD's 33kV apparatus at its Chippenham 132/33kV Grid Substation.
13. The ensuing flashover, which irreparably damaged three 33kV post-type insulators supporting the reserve bus-bar, resulted in the loss of 33kV in-feeds to eight of SEPD's 33/11kV Primary Substations.
14. The incident also affected the connections to two local photo-voltaic generation sites and to SEPD's on-site diesel generation facility.
15. SEPD's protection operated correctly to clear the incident from SEPD's distribution network.
16. Supplies to 38,699 of SEPD's customers were interrupted.
17. SEPD's distribution system emanating from Chippenham Grid Substation was running normally at the time of the incident.
18. However, aware that SEPD personnel were working on site at the time of the incident, SEPD's control engineer had to be assured that the incident was unconnected with their activities.
19. Having spoken to the personnel on site, and having been informed that a dead pigeon had been found below the damaged 33kV post-type insulators of the reserve bus-bar, SEPD's control engineer restored all supplies via tele-controlled switching within 6 minutes.
20. A simplified view of the sections of SEPD's 33kV network affected by this event is shown in Figure 1.

Figure 1 – Simplified Network Diagram of SEPD's 33kV distribution network affected by the incident

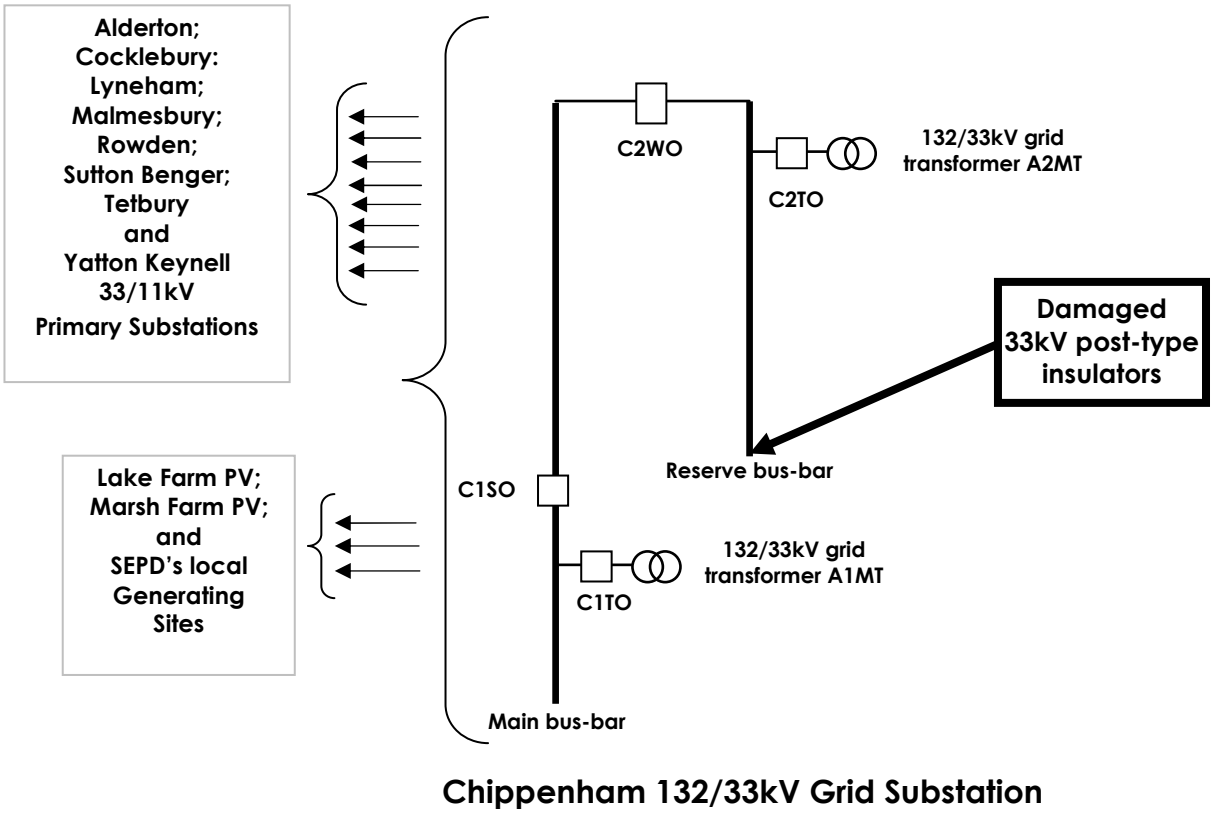

Notes:

1. Only the salient items of switchgear are shown.
2. SEPD's network was running normally at the time of the incident.
3. The outgoing feeders and generation connections are shown schematically – in reality they are connected across the two bus-bars.
4. All supplies were restored by tele-controlled switching.
5. Following inspection of the damaged insulators by SEPD's personnel on site, the reserve bus-bar was re-energised. It was subsequently de-energised for permanent repairs to be carried out.

2. Exceptionality requirements

2.1 Does the event qualify for exclusion

21. The AE considers that the event falls within the category of an "other event" as defined in paragraph 8.57 of Special Licence Condition CRC 8, and meets the exceptionality requirements set out in Appendix 3 thereof.
22. The AE therefore considers that, subject to satisfying the requirements of Appendix 4 to CRC 8, the event qualifies for possible exclusion under the "one-off" exceptional events process.

2.2 Exceptionality test results

23. The number of incidents attributed to the event is shown in Table 1.

Table 1 – The number of incidents attributed to the event

Number of incidents attributed to the event	Claimed number	Audited number
132kV	0	0
EHV	1	1
HV	0	0
LV	0	0
Total	**1**	**1**

24. The results calculated by the AE to test this claim against Ofgem's exceptionality criteria are shown in Appendix A. A summary of the results is shown in Table 2.

Table 2 – Summary of exceptionality test results

Test	Threshold	Claimed number	Audited number	Pass / Fail	Amount above threshold
CI exceptionality	0.9	1.30	1.30	Pass	0.40
CML exceptionality	0.7	0.08	0.08	Fail	0

Notes:

1. Ofgem's CI and CML exceptionality criteria are set out in the AE's ToR[1].
2. The audited CI and CML used in the exceptionality test have been determined from the number of incidents attributed to the event.
3. Where the event passes either or both the exceptionality thresholds, the amount(s) above the threshold(s) is/are carried forward into the Audit part 2 assessment of DNO performance.
4. In accordance with guidance from Ofgem, the AE's calculations use the threshold values contained in the current Distribution Price Control and the number of customers connected to the DNO's network relevant to the date on which the incident occurred.

[1] Audits of Electricity Distribution Network Operators' one-off Exceptional Events Claims for 2012/13 to 2014/15

3. SEPD's views of its performance

3.1 Dealing with the incident

25. SEPD's Chippenham 132/33kV Grid Substation is normally supplied via a dual 132kV circuit from National Grid's Melksham Grid Supply Substation.
26. In turn, SEPD's Chippenham 132/33kV Grid Substation, which is equipped with outdoor 33kV switchgear, bus-bars and connections, supplies 8 of SEPD's 33/11kV Primary Substations.
27. Chippenham Grid Substation also provides connections to 2 photovoltaic generation sites and to SEPD's on-site diesel generation facility.
28. The bus-bars at Chippenham Grid Substation were commissioned in their present form in the 1960's by the then Central Electricity Generating Board (CEGB). The 33kV outdoor switchgear consists of a main bus-bar running the length of the switchgear with a U-shaped reserve bus-bar around its number two side.
29. The main bus-bar is equipped with a bus-section circuit-breaker (C1SO); whereas the reserve bus-bar is not. A bus-coupling circuit-breaker (C2WO) connects the two bus-bars together.
30. The 33kV system is normally run 'solid' with one 132/33kV transformer feeding the main bus-bar, the other 132/33kV transformer feeding the reserve bus-bar and with the bus-coupler circuit-breaker closed.
31. At 09:47 on 14 January 2013, a three-phase flashover on the 33kV reserve bus-bar caused the circuit-breakers on the 33kV sides of the two 132/33kV transformers to trip on overcurrent protection, thus losing all supplies to SEPD's customers fed from Chippenham Grid Substation.
32. The system was running normally at the time of the incident and SEPD's protection operated correctly to clear the incident from the system.
33. SEPD personnel on site reported the cause of the incident to be a pigeon precipitating a bus-bar fault.
34. Supplies to all SEPD's customers affected by the incident were restored at 09:53, i.e. an interruption of 6 minutes duration.
35. SEPD considers that its duty control engineer reacted well in assessing the alarms generated by the event, contacting the personnel on site at Chippenham Grid Substation and restoring all supplies in 6 minutes.
36. SEPD also considers that its engineering team did well in replacing the three damaged 33kV post-type insulators by 17:25 on the day of the incident, thereby restoring the security of supplies to its customers.

3.2 SEPD's answers to questions on its performance

37. Within the last two years, the AE has reviewed SEPD's design standards, construction methods and maintenance procedures during previous visits to audit exceptional event claims and found them fit for purpose.
38. The AE confirms that SEPD's emergency procedures provide for the type of event being examined here.
39. To aid understanding of the background to SEPD's Statement of Facts (SoF), the AE prepared a list of initial questions regarding this incident. These questions were used as the basis for the examination of SEPD's claim.

40. The initial questions were discussed during the AE's visit to SEPD's Portsmouth Control Centre on 11 April 2013, when the records of SEPD's SCADA system, the incident report and other information were made available.
41. SEPD has provided answers to the AE's initial list of questions. For ease of reference, the AE's questions are printed in bold font with SEPD's answers being printed in normal font.

Q1. What changes, if any, has SEPD made to its emergency plans and procedures since the AE last visited to audit the exceptional event claim concerning the incident that occurred on 14 February 2012 which affected SEPD's customers in the Oxford area?

A1. SEPD has reviewed its emergency plans and procedures following the incident at Oxford (Cowley Grid) in February 2012. SEPD concluded that its processes and procedures catered for that type of incident and consequently no changes have been made to SEPD's emergency plans as a result.

Q2. SEPD's Statement of Facts (SoF) for the incident at Chippenham Grid Substation on 14 January 2013 indicates that the cause was attributed to a pigeon creating a flashover across a 33kV post insulator. SEPD's SoF also indicates that SEPD personnel working on site reported this to be the cause of the incident. What photographic evidence is available to support SEPD's claim that a pigeon was the cause of this incident?

A2. Three pieces of photographic evidence, captured shortly after the incident are available for the Appointed Examiner to view. One photograph shows pieces of freshly damaged porcelain insulator together with the pigeon at the base of the reserve bus-bar support.

Q3. The Appointed Examiner's audit report into the incident at Norrington Grid Substation that occurred on 21 June 2004 contains statements from SEPD regarding actions it is proposing to take that are intended to prevent incidents of this type from occurring. That report contained recommendations from the Appointed Examiner also aimed at preventing incidents of this type from occurring. The Appointed Examiner will need to examine what progress SEPD has made in implementing these actions

A3. SEPD continues with its programme of installing bus-bar auto-reclose schemes at appropriate sites. A number of these sites have been identified for switchgear replacement, which will mitigate this issue, as the replacement equipment will be indoor GIS switchgear. 42 sites, including Chippenham grid sub-station, have now been equipped with bus-bar auto-reclose schemes.

The value of installing this type of bus-bar auto-reclose scheme was evident at Aldershot Grid Substation in January 2012, when supplies to 31,899 customers were successfully restored.

Q4. What was the reason for SEPD's personnel being on site?

A4. SEPD's staff were on site working on protection upgrades, including the installation of a bus-bar auto-reclose scheme. The scheme was installed and commissioned on 31 January 2013. The associated switching log is available for the AE's inspection.

*[**AE's note:** SEPD's switching log clearly shows the commissioning of the bus-bar auto-reclose scheme at Chippenham Grid Substation on 31 January 2013].*

Q5. At the time of the incident on 14 January 2013 what protection schemes were installed at SEPD's: Chippenham Grid Substation on:

(a). The 33kV bus-bars?

A5(a). Voltage controlled overcurrent and standby earth fault.

(b). The 33kV sides of the two 132/33kV grid transformers A1MT and A2MT?

A5(b). Restricted earth fault, standby earth fault and duo-bias protection is installed.

(c) 33kV bus-section circuit-breaker C1SO?

A5(c). IDMT overcurrent and earth fault protection.

and

(d) The Circuit-breakers controlling the 132kV sides of grid transformers A1MT and A2MT?

A5(d). Transformer protection, Buchholz, restricted earth fault, standby earth fault and duo-bias protection is installed.

Q6. What settings are applied to the above protection schemes?

A6. A list of full protection settings was provided to the AE during the audit visit.

Q7. What protection operated when supply was lost?

A7. Voltage controlled overcurrent.

Q8. When were the 33kV bus-bars and switchgear commissioned at SEPD's Chippenham Grid Substation?

A8. During the early 1960's.

Q9. What material were the damaged 33kV post insulators made from?

A9. Porcelain.

Q10. An examination of the 33kV system diagram in SEPD's SoF claim suggests that Chippenham Grid Substation is a double bus-bar arrangement where the reserve bus-bar appears to have no Bus-Section Circuit Breaker.

In considering SEPD's SoF, the Appointed Examiner will need to further understand the actual running conditions of SEPD's 33kV network associated with its Chippenham Grid Substation in its 'normal' mode; which, as stated in SEPD's SoF, was the case at the time of the incident?

A10. The running condition was normal at the time of the incident.

Q11. What learning points has SEPD incorporated into its procedures as a result of this incident?

A11. SEPD has reviewed its existing procedures following this incident, and are satisfied that they minimise the impact of bus-bar faults in open bus-bar substations.

Q12. What further learning points should be considered as a result of the application of the current one-off Exceptional Event Claims process?

A12. SEPD's previous suggestion was for the audit to follow relatively soon after the event - as in this case.

42. During the discussion of this claim it was concluded that a visit to SEPD's Chippenham Grid Substation would be unnecessary; the AE was satisfied with SEPD's date-stamped audit trail and SEPD's photographic evidence. Also, "Google Maps" provided sufficient site information to enable the AE to make a judgement on the location and layout of SEPD's Chippenham Grid Substation.

43. SEPD also provided further information both during and subsequent to the audit visit. This includes:

- SEPD's photographs of the dead pigeon and the damaged 33kV porcelain insulators;
- SEPD's control room log for this incident;
- SEPD's incident report from which it calculated the CI and CML attributed to this incident;
- The details of SEPD's SCADA alarms received during this incident;
- A representation of the incident on SEPD's SCADA system;
- Copies of SEPD's protection schemes and associated relay settings for its 132kV and 33kV feeders affected by this event; and
- SEPD's control room log for the commissioning of its bus-bar auto-reclose scheme at Chippenham Grid Substation on 31 January 2013.

4. Audit part 2

4.1 SEPD's performance in preventing the event

44. In viewing SEPD's performance in preventing this event, the AE has considered what more SEPD could have reasonably done to ensure that its 33kV switchgear at Chippenham Grid Substation was safeguarded from the effects of third party interference and such things as the larger sizes of birds and windborne materials.
45. The AE has discussed SEPD's policy on its preventative measures and has been shown photographs of the site from which it is possible to determine that they are properly applied.
46. Augmenting the information from SEPD's photographs via the on-line facilities of "Google Maps"; shows SEPD's Chippenham Grid Substation to be surrounded by an 'unclimbable' palisade fence in accordance with accepted UK practice for this type of substation. The fence is in good condition and carries statutory warning notices.
47. SEPD's photograph 1, taken at the time of the incident shows the dead pigeon below the 33kV bus-bar support and the shattered porcelain fragments referred to in SEPD's answer to the AE's question number 2.
48. SEPD's photograph 2, taken shortly after the incident and before permanent repairs were effected, shows the damage to the three 33kV post-type insulators below which the dead pigeon was found.
49. A general view of the area surrounding the damaged 33kV post-type insulators can be gauged from SEPD's photograph 3.
50. It is practically impossible to insulate all the live exposed conductors in 33kV compounds such as at SEPD's Chippenham Grid Substation and SEPD is working to retro-fit bus-bar reclosing schemes at its Substations that are equipped with outdoor 33kV switchgear as at its Chippenham Grid Substation.
51. The AE has discussed SEPD's progress with this initiative and is pleased to note that the programme is still on course, with the work at Chippenham actually underway at the time of the incident.
52. As was the case with Chippenham Grid Substation, the AE accepts that the remaining few of SEPD's Substations to be fitted with its bus-bar auto-reclose scheme are the more difficult sites to deal with as the logic required to cater for all credible scenarios is complex and each scheme needs very careful consideration and planning to ensure it is effective.
53. SEPD's measurement systems clearly show the tripping of the two 33kV circuit-breakers associated with the Chippenham Grid Transformers (A1MT and A2MT) at 09:47 on 14 January 2013.
54. SEPD's measurement systems also confirm the restoration of all supplies to the eight affected Primary Substations together with the three generating site connections via tele-controlled switching at 09:53 on 13 January 2013.
55. An examination of SEPD's measurement systems and a SCADA representation of its distribution network confirm that SEPD did all it could to restore supplies as expeditiously as possible.

56. The AE concludes that SEPD had done all it could reasonably have been expected to do in considering that its outdoor 33kV equipment at its Chippenham Grid Substation was protected from the effects of third party interference, windborne material and large birds in accordance with accepted good practice within the UK electricity supply industry.

4.2 SEPD's performance in mitigating the effects of the event

57. The irreparable damage to the three 33kV post-type insulators is consistent with an electric arc having occurred between the energised 33kV bus-bars and with the operation of overcurrent protection to clear the incident from SEPD's distribution system.
58. The resultant flashover would have had the effect of creating virtually simultaneous faults on the main and reserve bus-bars at SEPD's Chippenham Grid Substation.
59. The AE has studied the running arrangements of SEPD's 33kV distribution network at its Chippenham Grid Substation and concludes that SEPD's protection systems worked correctly to clear the incident from SEPD's distribution system.
60. The AE commends SEPD's control engineers for analysing the situation, contacting SEPD's personnel on site and for restoring supplies as rapidly as possible, thereby minimising the duration of the interruption.
61. The AE commends SEPD for continuing with its programme of modifying the protection schemes at its outdoor 33kV substations and for its continual review of the performance of those schemes it has completed with a view to introducing further improvements in its on-going programme, including considering the possibilities of installing bus-section circuit-breakers in reserve bus-bars where of benefit and where practicable.

4.3 Recommended performance adjustments

62. The AE's recommendations to Ofgem are shown in Table 3.

Table 3 – Recommended performance adjustments

	Amount above threshold	Audit part 2 recommendation
CI	0.40	0.40
CML	0	0

4.4 Detailed justification

63. In reaching a judgement on a recommendation, the AE has firstly considered whether or not SEPD could have reasonably taken any different course of action that would have prevented the pigeon from precipitating a three-phase 33kV flashover at SEPD's Chippenham Grid Substation.

64. In viewing SEPD's performance in preventing this event, the AE has taken into account his personal knowledge of the United Kingdom's distribution system practice and that of his colleagues who have considerable operational experience of incidents due to many causes.
65. The AE considers that the preventative measures employed by SEPD on its 33kV outdoor switchgear at its Chippenham Grid Substation are in accordance with the current industry standard and, as far as is reasonably practicable, prevent damage due to third party interference, larger birds and windborne objects.
66. When considering SEPD's programme to retro-fit its 33kV bus-bar auto-schemes, it rightly concentrated on the majority of the sites as where there were no complex operational issues.
67. The AE also considers that the connections with the three generating sites at SEPD's Chippenham Grid Substation rightly placed it amongst the 'more difficult' category which require further in-depth planning and hence it being towards the end of SEPD's programme.
68. In considering SEPD's restoration strategy, the AE is conscious that SEPD's duty control engineer acted with commendable skill and speed in analysing the SCADA alarms and indications generated by this incident, contacting SEPD's personnel on site and restoring supplies within six minutes.
69. The AE confirms that SPED's SCADA system shows that the 33kV bus-bar auto-reclose scheme at SEPD's Chippenham Grid Substation was commissioned on 31 January 2013.
70. The AE is satisfied that SEPD's distribution network at Chippenham Grid Substation complies with the requirements of Security of Supply Standard P2/6 (90 MVA firm).
71. The Appointed Examiner therefore concludes that SSE's claim is justified and recommends to Ofgem that the amount of CI above the threshold value should be excluded from SEPD's performance for reporting year 2012/13.

Appendix A - Record of Audit part 1

Table A-1: Appointed Examiner's Information Log

"One-Off" Exceptional Event	Reporting Year 2011/12
Licensed Area	SEPD
Date of event	14 January 2013
Cause	Three-phase flashover of 33kV bus-bars
Notification to Ofgem	22 January 2013
SoF received	25 January 2012
SoF information	• protection operated to trip the 33kV circuit-breakers (C1TO and C2TO) on Grid Transformers A1MT and A2MT at Chippenham Grid Substation at 09:47 on Monday, 14 January 2013; • supplies to 8 of SEPD's 33/11kV Primary Substations and 3 generating stations were interrupted; • SEPD personnel working on site confirmed found a dead pigeon at the foot of a support carrying the 33kV reserve bus-bars; • SEPD's personnel also confirmed three irreparably damaged 33kV post-type insulators but that the bus-bar was safe to re-energise; • Using tele-controlled switching, SEPD's control engineer restored all supplies by closing C1TO at 09:53; and • The three damaged post-type insulators were replaced that day with the bus-bar being re-energised at 17:25.
Additional pre-visit information provided	Based on the SoF the AE drew up a list of initial questions. These were discussed during the audit visit. This initial list of questions, together with SEPD's response, is contained in paragraph 41 of the report.
Location of audit visit	SEPD's Portsmouth Control Centre.
Date of audit visit	11 April 2013
Visiting Auditor	Geoff Stott (ep)
SEPD's Representatives	Adam O'Hara and Dave Sharman

Information provided during and subsequent to the audit visit	Comprehensive documentation / information including:
	• a discussion of the 'as-was' protection arrangements at SEPD's Chippenham Grid Substation;
	• the settings applied to the above protection schemes;
	• a discussion of the 'as-now' bus-bar auto-reclose scheme, including viewing the switching programme on SEPD's SCADA system by which the scheme was commissioned on 31 January 2013;
	• sight of SEPD's switching programme for the incident which shows the loss of supplies from SEPD's Chippenham Grid Substation at 09:47 on 14 January 2013 when C1TO and C2TO tripped and the subsequent closing of C1TO to restore supplies at 09:53 - an interruption of 6 minutes;
	• copies of the relevant 33kV SLDs;
	• sight of the printout from SEPD's SCADA system that shows the alarms generated by the event;
	• sight of SEPD's incident report that shows:
	  o the number of customers affected by the incident to be 38,699; and
	  o the customer minutes lost due to the incident to be 232,194.
	• the AE confirms that these figures agree with those quoted in SEPD's SoF;
	• using SEPD's total connected customers at 30 September 2012 of 2,967,585 the number of customers affected equates to a CI of 1.30. [38,699*100/2,967,585]; and
	• similarly, the customer minutes lost for this event equate to a CML of 0.08. [232,194/2,967,585].
	• SEPD's photograph of the area of the 33kV compound at the point of damage, together with "Google Maps" views showing Chippenham Grid Substation's surrounding compound fence.
	• No need to visit Chippenham Grid Substation to clarify anything.
	• Discussed the programme of modifications to SEPD's protection schemes at its 33kV outdoor substations and the complexities of the few remaining sites, including impending switchgear replacement to obviate the need for these modifications.
	• Discussed post-fault learning points, including anything to affect the above programme.
	• Confirmed P2/6 compliant (90 MVA firm).
	• SEPD provided answers to the initial questions plus additional information both during and subsequent to the audit visit.
	• Okay regarding compliance with Appendix 4 of Paragraph 8.58 of CRC 8.

Table A-2: Impact on CI and CML

	CI		CML	
	Claimed	**Audited**	**Claimed**	**Audited**
132kV	0	0	0	0
EHV	1.30	1.30	0.08	0.08
HV	0	0	0	0
LV	0	0	0	0
Total	1.30	1.30	0.08	0.08
SEPD Threshold (total)	0.9		0.7	
Part 1 Exceptionality Test	Pass		Fail	
Part 1 Precondition of eligibility (meets App 3 to paragraph 8.57 of CRC 8)	Pass			

NOTE: SEPD's measurement systems are subject to QoS audits for accuracy of reporting and it is not within the AE's ToR to repeat that work as part of the examination of exceptional event claims, although any consequential adjustments to reporting accuracy will be reflected in Ofgem's final adjudication of reported performance for the regulatory reporting year 2012/13.

Appendix B - SEPD's photographs

Photograph 1 – The dead pigeon and porcelain fragments at the foot of the support carrying the reserve 33kV bus-bar

Photograph 2 – The damaged 33kV post-type insulators on the reserve bus-bar

Photograph 3 – General view of the 33kV compound at the point of damage